279

April 2017

Time – Three hours *(Maximum Marks: 75)*

[N.B: (1) Answer any FIVE questions in each PART – A and PART – B. Q.No. 8 in PART – A and Q.No. 16 in PART – B are compulsory.

(2) Answer division (a) or division (b) of each question in PART – C.

(3) Each question carries 2 marks in PART – A, 3 marks in Part – B and 10 marks in PART – C.]

PART – A

1. Define viscosity of a fluid.
2. State Pascal's law.
3. What is an orifice?
4. Define co-efficient of contraction.
5. What is a draft tube?
6. Draw the ISO symbol of 5/3 DCV.
7. What is the use of accumulator?
8. Define negative slip. In which type of pumps it will occur?

PART – B

9. Distinguish between cohesion and adhesion.
10. Define wetted perimeter and hydraulic radius.
11. Differentiate impulse and reaction turbines.
12. Describe about indicator diagram.
13. List out the elements of pneumatic system with a line diagram.
14. What is the purpose of quick exhaust valves used in pneumatics system?
15. State any three advantages of hydraulic system.
16. What are the objectives of adding additives to hydraulic oil?

PART – C

17. (a) (i) Explain the terms atmospheric pressure, gauge pressure and vacuum pressure.
    (ii) Explain the working of hydraulic press with neat sketch.

[Turn over....

(Or)

(b) (i) Explain the working of dead weight pressure gauge with a simple sketch.

(ii) An inverted U-tube differential manometer is connected to measure the difference of pressure between two points of horizontal pipe line carrying water. The gauging liquid is an oil of specific gravity 0.8. Find the difference of pressures, if the manometer is 0.4m.

18. (a) (i) Derive Chezy's formula for the loss of head due to friction in pipes.

(ii) Compare the velocities of flow of water in two pipes of diameter 160mm and 220mm respectively, when the loss of head due to friction, length of pipe and the value of 'f' are same for each pipe.

(Or)

(b) (i) State the laws of fluid friction in laminar flow.

(ii) State the advantages and limitations of Bernoulli's theorem.

19. (a) (i) Explain the working of impulse turbine with a neat sketch.

(ii) Compare piston and plunger pumps.

(Or)

(b) (i) Explain any one type of casing employed in centrifugal pumps.

(ii) State the advantages of air vessels used in reciprocating pumps.

20. (a) (i) Explain the working of a 5/2 DCV in pneumatics.

(ii) Draw the circuit diagram for the operation of a double acting cylinder with metering-in control.

(Or)

(b) Explain the automatic operation of double acting cylinder with a circuit.

21. (a) (i) Explain the working of internal gear pump with a simple sketch.

(ii) Explain the working of any one type of accumulator with sketch.

(Or)

(b) (i) Explain the table movement of milling machine with a hydraulic circuit.

(ii) Compare pneumatic and hydraulic systems.

Register No.:

321

October 2017

Time – Three hours
(Maximum Marks: 75)

[N.B: (1) Q.No. 8 in PART – A and Q.No. 16 in PART – B are compulsory. Answer any FOUR questions from the remaining in each PART – A and PART – B.

(2) Answer division (a) or division (b) of each question in PART-C.

(3) Each question carries 2 marks in PART – A, 3 marks in Part – B and 10 marks in PART – C.]

PART – A

1. What is meant by pressure head?
2. Define compressibility.
3. What is turbulent flow?
4. Write down the formula to find the theoretical discharge of a double acting reciprocating pump.
5. What are the different types of impellers used in centrifugal pumps?
6. Draw the ISO symbol of FRL unit.
7. What is 3/2 DCV?
8. State any two demerits of hydraulic systems.

PART – B

9. Explain the method of measuring local atmospheric pressure.
10. What is continuity equation? Explain.
11. State Bernoulli's theorem and write its few applications.
12. Write the expression for the work done by the jet on a series of moving plates on the circumference of a revolving wheel.
13. State the difference between Kaplan turbine and Francis turbine.
14. What is FRL unit? Explain briefly.
15. Explain the working of a pressure regulator.
16. List out the elements of hydraulic system with a line diagram.

PART – C

17. (a) (i) A gauge fitted to a compressor shows a reading of 30kN/m². Compare the corresponding absolute pressure in (a)kN/m² and (b) "m" of water.

(ii) Explain the working of hydraulic jack with a neat sketch.

(Or)

(b) (i) What are the precautions to be followed in setting up and operation of manometer?

(ii) Explain the working of Bourdon tube pressure gauge with a simple sketch.

18. (a) (i) What are the hydraulic co-efficients? Explain briefly.

(ii) Using Chezy's formula, determine the head lost due to friction in a pipe of 80mm diameter and 35m length. The velocity of flow is 2 m/s and C=100.

(Or)

(b) (i) Compare Venturimeter and Orificemeter.

(ii) Two reservoirs are connected by a pipe line of length 500m. The difference in level between the reservoirs is 10m. If the maximum discharge is 0.2m³/s, calculate the required size of the pipe. Assume f=0.005.

19. (a) A jet of water 80mm diameter moves with a velocity of 15m/s and strikes a series of vanes moving with a velocity of 10m/s. Find (a) the force exerted by the jet, (b) work done by the jet per second and (c) efficiency of the jet.

(Or)

(b) Explain the governing of Pelton wheel with a neat sketch.

20. (a) (i) Explain the use of shuttle valve in pneumatic circuits.

(ii) List out the merits of pneumatic system.

(Or)

(b) (i) Explain the working of 5/2 DCV with a neat sketch.

(ii) Draw the circuit diagram for the direct control of single acting cylinder and explain.

21. (a) (i) Explain the spring loaded type accumulator.

(ii) Explain radial piston pump with a sketch.

(Or)

(b) (i) Explain the various essential qualities of a good hydraulic fluid.

(ii) Explain the hydraulic circuit used for the table movement of a surface grinding machine.

---

484 Register No.: [ ]

April 2018

Time – Three hours
(Maximum Marks: 75)

[N.B: (1) Q.No. 8 in PART – A and Q.No. 16 in PART – B are compulsory. Answer any FOUR questions from the remaining in each PART – A and PART – B

(2) Answer division (a) or division (b) of each question in PART – C.

(3) Each question carries 2 marks in PART – A, 3 marks in Part – B and 10 marks in PART – C.]

PART – A

1. Define: Specific volume.
2. Define: Pressure head of a liquid.
3. What is meant by stream line?
4. List out the minor energy losses.
5. A jet of water 0.25m diameter is moving with a velocity of 30m/sec. Find the force exerted by the jet on a fixed plate held normal to the jet.
6. List few machines using hydraulic intensifiers.
7. What is the use of quick exhaust valve?
8. What is meant by cavitations.

PART – B

9. Express 125kN/m² of pressure in 'm' of water and 'mm' of mercury.
10. What are the assumptions of Bernoulli's theorem?
11. Compare piston pump and plunger pump.
12. Explain quick exhaust valve.
13. Describe with a sketch about external gear pump.
14. What are the advantages of mechanical gauges?
15. Water flows with a velocity of 5m/sec. in a pipe of 1m diameter and 1km long. Find Chezy's constant, if the loss of head due to friction is 10m of water.
16. Explain shuttle valve with a neat sketch.

PART - C

17. (a) State Pascal's law. Give any two examples where this principle is applied.

(Or)

(b) A simple U-tube mercury manometer is used to measure the pressure of water in a pipeline. The mercury level in the open tube is 70mm higher than that on the left tube. The height of water in the left tube is 50mm. Find the pressure in the pipe in (a)metre of water (b)kN/m².

18. (a) A 10cm diameter orifice fitted to a tank discharges 2.34m³/min of water under a constant head of 3m. The diameter of the jet at vena-contracta is found to be 8.25cm. Find C_d, C_v and C_c.

(Or)

(b) Two reservoirs are connected by a pipe line of length 500m. The difference in water level between the reservoirs is 10m. The maximum discharge is 20m³/sec. Find the required size of the pipe, if the co-efficient of fiction is 0.02.

19. (a) State the types of surge tank. Draw a neat sketch of any two types and explain their working principles.

(Or)

(b) Explain with a neat sketch about the construction and working of air vessel.

20. (a) Explain the working principle of a pressure reducing valve with a neat sketch.

(Or)

(b) Draw a pneumatic circuit diagram for the direct control of single acting cylinder and explain.

21. (a) Explain about the different types of directional control valves with neat sketches.

(Or)

(b) Draw a hydraulic circuit of a shaping machine and explain its working.

565
OCTOBER 2019
32043/ FLUID MECHANICS AND FLUID POWER – ANSWER KEY

	PART – A	
Q.No.	**Description of answer**	**Marks**
1	**Newtonian Fluid:** A fluid which obeys Newton's Law of viscosity is called Newtonian fluid. **Ex; Water, Lubricating oil etc.**	2
2	**Advantages of micro manometer:** Micro manometer is used for measuring low pressure with high degree of accuracy. Micro manometer is a modified form of manometer.	2
3	**Steady flow of fluid**: If at any section of flow the quantity of liquid flowing per seconds is constant, the flow is called steady flow. (or) If the liquid properties such as velocity, pressure, density at any point of liquid do not change with respect to time, it is called steady flow. **Ex**: Flow through a tap, when the water level in a tank is constant.	2
4	**Impact of jet:** Nozzle is a Tapering short pipe. The stream of liquid issuing from a nozzle is known as a jet. Whenever a Jet of liquid impinges on a fixed plate. It exerts some force on the plate. This dynamic force is called impact of Jet.	2
5	**Priming:** Removal of air present in the casing, impeller and suction pipe by filling in the pump with liquid is known as priming.	2
6	**Function of check valve:** It is used to allow the air in only one direction and reverse flow is not at all possible. Hence it is known as non-return valve.	2
7	**Throttle valve:** A throttle valve is usually adjustable and the setting can be locked in any position. It controls the flow volume for infinitely variable piston or motor speed.	2
8	**Cracking pressure of valve:** Cracking pressure is the minimum upstream pressure required to open a check valve enough to allow detectable flow.	2
	PART – B	
9	**Properties:** • Density – kg/m3, Specific volume – m^3/kg, Specific weight – N/m^3 • Specific gravity – No unit	3
10	**Bernoulli's theorem:** Bernoulli's theorem states "for a perfect in compressible liquid, flowing in a continuous stream, the total energy of a particle remains same while the particle moves from one point to another point".	3
11	**Function of accumulator:** • To act as a pressure regulator for starting and stopping of the pumps. • To use as a fluid compensator to make up the leakages of fluid when the pump is switched off. • To act as a shock absorber for providing cushioning effect in the hydraulic circuit. • To maintain pressure for some period of time as in case of clamping jaws. • To store the hydraulic oil under pressure and supply the oil as when required.	3
12	**Surge tanks:** • A surge tank is a small reservoir or tank in which the water level rises or falls to reduce the pressure swings so that they are not transmitted in full to a closed circuit. **Types:** 1. Simple Surge Tank 2. Inclined Surge Tank 3. The expansion Chamber and Gallery type Surge Tank 4. The restricted orifice or Throttled Surge Tank 5. Differential surge tank	3
13	**Air-vessel:** Air vessel is a closed chamber containing compressed air at the top and liquid at the bottom. Air vessel is connected to the reciprocating pump through the	3

	opening at the base through which liquid enters into it during delivery stroke of the pump and compressed. It flows out during suction stroke of the pump as the compressed air expands in the air vessel. Functions: 1. It provides uniform discharge from pump. 2. The chances of cavitation or separation are considerably reduced. 3. A considerable amount of work is saved as frictional resistance. 4. The pump can run at higher speed and provides higher discharge.	
14	**Shuttle valve:** **Construction** The basic structure of a shuttle valve is like a tube with three openings; one on each end, and one in the middle. A ball or other blocking valve element moves freely within the tube. When pressure from a fluid is exerted through an opening on one end it pushes the ball towards the opposite end. This prevents the fluid from traveling through that opening, but allows it to flow through the middle opening. In this way two different sources can provide pressure without the threat of back flow from one source to the other. **Working** In certain pneumatic circuits, the air flow can be controlled from more than one point. Figure shows the arrangement of a three port shuttle valve. It provides path for air from two alternative sources. It consists of two inlet port, one outlet port and a shuttle piston. When the pressure at port- Y is greater than the pressure at port -X, then the shuttle piston blocks the flow of air at port-X. Hence the air can flow from port-Y to outlet port-A. If the pressure at port- X is greater than the pressure at port -Y, then the shuttle piston blocks the flow of air at port-Y. Hence the air can flow from port-X to outlet port-A. 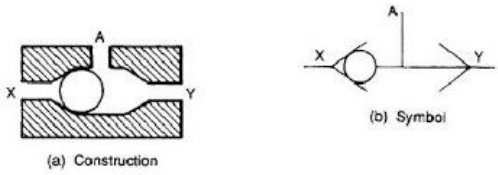 Pneumatic shuttle valve	3
15	**Merits of pneumatic system:** • Leakages can be easily identified. • Maintenance is less. • Light weight machines or equipment can be operated at faster. • Air is safe and readily available fluid. • Since air is inflammable fluid, fire and explosion hazard are avoided in painting and mining industries. • Air can be used even in high ambient temperature. • It is less expensive than hydraulic system. **Applications:** • Pneumatic tools like drills, riveters etc. • In automobile industry, air brakes, power jacks and sprays painting. • In mines for loading, unloading, clamping etc. • In agriculture, paddy transplants, harvesting machines etc. • In printing industry speed control of equipment and automation etc. • In plastic industry, processing of plastic and blow moulding etc. • In leather industry, air operated cutters and finishing of leather etc. • In textile industry, speed regulation of spinning, weaving and colour feeding etc.	3
16	**Definition of C_c, C_v, C_d:** **Coefficient of contraction (C_c).** It is defined as the ratio of area of jet at vena contracta (ac) to the area of orifice (a). **Coefficient of velocity (C_v).** It is defined as the ratio of the actual velocity of the jet at vena contracta (v) to the theoretical velocity. **Coefficient of discharge (C_d).** It is defined as the ratio of the actual discharge through the orifice (Q) to the theoretical discharge (Qth).	3

	PART – C	
17.(a).	**(i) Working of diaphragm pressure gauge:** **Construction:** This gauge is used for measuring low pressure. The principle used in this gauge is elastic deformation of a thin element called a diaphragm is proportional to the pressure. It consists of Diaphragm, Rack and Pinion, Pointer, Dial. **Working:** When the gauge is connected to the pressure point whose pressure is to measured. The fluid under pressure causes some deformation of the diagram. Upward movement of the diagram causes the rack to move up. Pinion attached to the rack rotates. With the help of rack and pinion mechanism the pointer moves over a calibrated dial, which directly reads the pressure of the fluid. 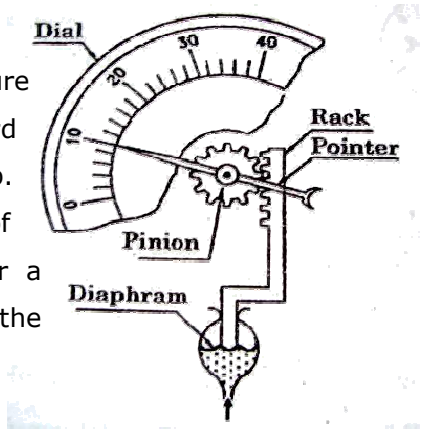 (ii). **Working of Hydraulic jack:** The hydraulic jack is used to lift heavy loads by the application of a much smaller force. It is working under Pascal's law. It consists of Ram, Plunger with handle, Suction & Delivery valve and Reservoirs **Working:** The plunger will be moved up and down by actuating the handle. During the upward movement of the plunger, partial vacuum is produced in the plunger side. Now liquid flows to the plunger side from the reservoir by opening the suction valve. Now the delivery valve will be in closed position. During the downward movement of the plunger the liquid moves at the bottom of ram and then ram is moves up. The heavy load at the top of the ram is lifted. There is lowering screw at the bottom of ram side. It is unscrewed to allow the liquid to the reservoir. Hence the ram will be moved downward to lower the load. 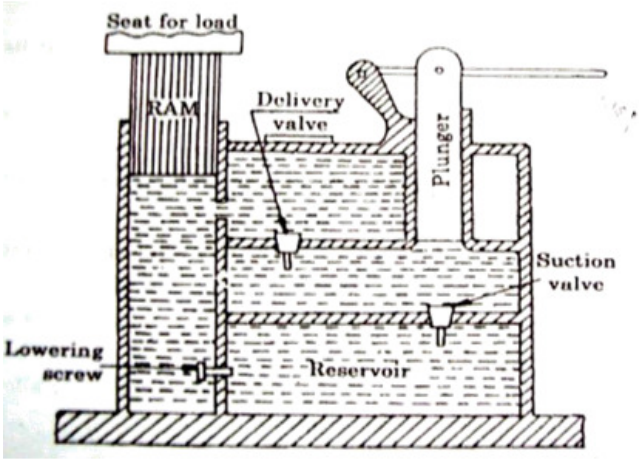 	5+5
	(OR)	

17.(b).	**Given data:** **To find: h_2** S_1=1.64 P_a= 128 kN/m^2 S_3=0.85 P_b=270 kN/m^2 h_1=3 m h_2=h_3; S_2=13.6	10

Solution:

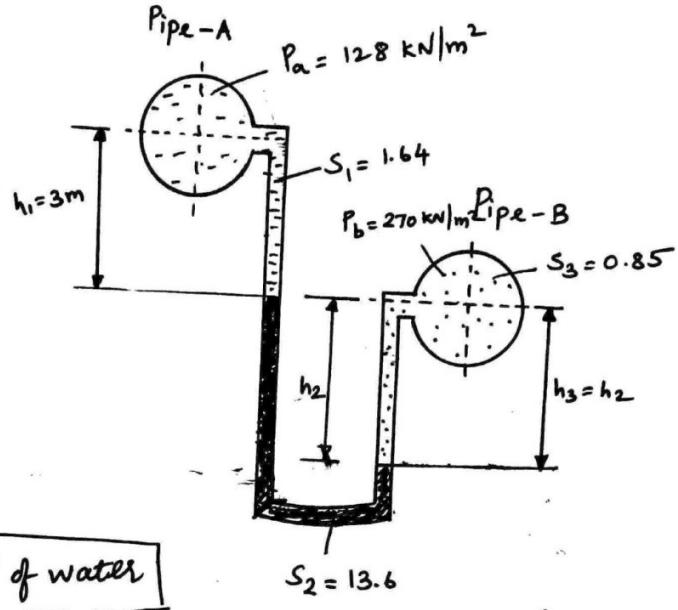

$$P_b - P_a = 270 - 128$$

$$= 142 \text{ kN/m}^2$$

$$\therefore h_b - h_a = \frac{P_b - P_a}{w}$$

$$= \frac{142}{9.81}$$

$$\boxed{h_b - h_a = 14.475 \text{ 'm' of water}}$$

$$h_a + h_1 S_1 + h_2 S_2 = h_b + h_3 S_3$$

$$h_b - h_a = h_1 S_1 + h_2 S_2 - h_3 S_3$$

$$h_b - h_a = h_1 S_1 + h_2 (S_2 - S_3)$$

$$\therefore h_2 = \frac{(h_b - h_a) - h_1 S_1}{S_2 - S_3}$$

$$= \frac{14.475 - (3 \times 1.64)}{13.6 - 0.85}$$

$$h_2 = 0.7494 \text{ m}$$

$$\boxed{h_2 = 749.411 \text{mm}}$$

18.(a).	**Given data:** **To find: Q** d_1=220 mm=0.22 m d_2=110 mm=0.11 m x=260 mm=0.26 m C_d=0.98 Solution :- $Q = \frac{C_d \cdot a_1 \cdot a_2 \cdot \sqrt{2gh}}{\sqrt{a_1^2 - a_2^2}}$ $a_1 = \frac{\pi}{4} \times d_1^2 = \frac{\pi}{4} \times 0.22^2$ $a_1 = 0.038\ m^2$ $a_2 = \frac{\pi}{4} \times d_2^2$ $= \frac{\pi}{4} \times 0.11^2$ $a_2 = 9.503 \times 10^{-3}\ m^2$ $h = x\left(\frac{s_2}{s_1} - 1\right)$ $= 0.26\left(\frac{13.6}{1} - 1\right)$ $h = 3.276\ m$ $\therefore Q = \frac{0.98 \times 0.038 \times 9.503 \times 10^{-3} \times \sqrt{2 \times 9.81 \times 3.276}}{\sqrt{0.038^2 - (9.503 \times 10^{-3})^2}}$ $Q = 0.07711\ m^3/s$ $Q = 0.07711 \times 1000$ $Q = 77.113\ l/s$	10
	(OR)	

18.(b)	**Darcy-Weisbach equation:**	10

Consider a horizontal pipe of uniform cross-sectional area carrying a liquid under pressure. Let Sections 1-1 and 2-2 of the pipe be separated by a distance, l as shown in fig. 2.29.

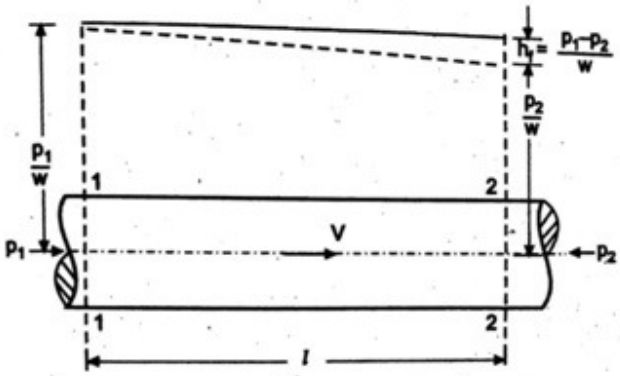

Fig. 2.29 Loss of head due to friction

Let, d – Diameter of the pipe (m).

a – Area of cross-section of pipe (m^2)

P – Wetted perimeter (m).

l – Length of the pipe line considered between sections 1-1 and 2-2

A – $P \cdot l =$ Area of wetted surface (m^2).

v – Mean velocity of flow (m/s)

p_1 – Intensity of pressure of liquid at 1 – 1 (kN/m^2).

p_2 – Intensity of pressure of liquid at 2 – 2 (kN/m^2).

f' – Frictional resistance per unit area at unit velocity $\left[\frac{kN - s^2}{m^3}\right]$

h_f – Head lost due to friction (m)

w – Specific weight of liquid (kN/m^3)

Applying Bernoulli's equation between sections 1-1 and 2-2,

$$Z_1 + \frac{p_1}{w} + \frac{v_1^2}{2g} = Z_2 + \frac{p_2}{w} + \frac{v_2^2}{2g} + h_f$$

Pipe is horizontal; $\therefore Z_1 = Z_2$ and $v_1 = v_2 = v$

$$\therefore h_f = \frac{p_1}{w} - \frac{p_2}{w} \qquad (1)$$

Total pressure (Force) of liquid at $1-1 = p_1 \cdot a$

Total pressure (Force) of liquid at $2-2 = p_2 \cdot a$

$\therefore$ Frictional resistance, $F.R = p_1 \cdot a - p_2 \cdot a = a \times (p_1 - p_2)$ (2)

But, From Froude's experiment,

Frictional Resistance, $F.R = f' \cdot A \cdot v^n$

where, $A =$ Area of wetted surface $= P \times l$

Assuming $n = 2$, $F.R. = f' \cdot P \cdot l \cdot v^2$ (3)

Equating 2 & 3, $a \times (p_1 - p_2) = f' \cdot P \cdot l \cdot v^2$

$$p_1 - p_2 = f' \cdot \frac{P}{a} \cdot l \cdot v^2$$

Dividing both sides by 'w'

$$\frac{p_1 - p_2}{w} = \frac{f'}{w} \cdot \frac{P}{a} \cdot l \cdot v^2$$

$$h_f = \frac{f'}{w} \cdot \frac{1}{m} \cdot l \cdot v^2 \quad \left[\because \frac{a}{P} = m \right]$$

$$h_f = \frac{f' \cdot l \cdot v^2}{w \cdot m} \qquad (4)$$

Substituting $f' = \frac{F \cdot w}{2g \cdot 4}$ Where F is known as *Friction factor.*

$$h_f = \frac{F \cdot w \cdot l \cdot v^2}{w \cdot m \cdot 2g \cdot 4} = \frac{F \cdot l \cdot v^2}{m \cdot 2g \cdot 4}$$

For a circular cross-sectional pipe, $m = \frac{d}{4}$

$$\therefore h_f = \frac{F \cdot l \cdot v^2}{\left(\frac{d}{4}\right) \cdot 2g \cdot 4} = \frac{F \cdot l \cdot v^2}{2g \cdot d}$$

$$h_f = \frac{F \cdot l \cdot v^2}{2g \cdot d} \text{ m of liquid} \quad (5)$$

The equation (5) is known as Darcy-Weisbarch equation and this is commonly used for determining loss of head due to friction in pipes.

The friction factor F is not constant and vary with roughness condition of the pipe surface. The value of F varies from 0.02 to 0.04.

Equation (5) can also be modified as follows.

$$Q = a \cdot v = \frac{\pi \cdot d^2}{4} \times v \quad \therefore \quad v = \frac{4Q}{\pi \cdot d^2}$$

Substituting the value of v in equation (5).

$$h_f = \frac{F \cdot l}{2g : d}\left[\frac{4Q}{\pi \cdot d^2}\right]^2 = \frac{F \times l \times 16 \times Q^2}{2g \times d \times \pi^2 \times d^4}$$

$$h_f = \frac{F \cdot l \cdot Q^2}{12.1 \times d^5} \text{ m of liquid}$$

or, $$Q = \frac{12.1 \times d^5 \times h_f}{F \times l} \quad (6)$$

Equation (6) can be used when the discharge is given for finding head lost due to friction.

In olden practice, Darcy-Weisbach formula for head lost due to friction was derived as,

$$h_f = \frac{4f \cdot l \cdot v^2}{2g \cdot d}$$

Still, this formula is made use in some countries.

In this case, f is known as *co-efficient of pipe friction or Darcy's co-efficient of friction. The value of f varies from 0.005 to 0.01*

If f value (0.005 to 0.01) is given in the problem, then friction factor is given by.

$$F = 4f$$

19.(a)	**(i) Construction and working of Francis turbine:** **MAIN PARTS:** 1. Casing 2. Guide mechanism 3. Runner 4. Draft tube **1. Casing** ➢ The water from the penstocks enters the casing which is of spiral shape in which area of cross section of the casing goes on decreasing gradually. ➢ The casing completely surrounds the runner of the turbine. ➢ The casing is made of spiral shape, so that the water may enter the runner at constant velocity throughout the circumference of the runner. ➢ The casing is made of concrete steel or plate steel. **2. Guide mechanism** ➢ It consists of a stationary circular wheel all round the runner of the turbine. ➢ The stationary guide vanes are fixed on the guide mechanism ➢ The guide vanes allow the water to strike the vanes fixed on the runner without shock at inlet. ➢ Also by a suitable arrangement, the width between two adjacent vanes of guide mechanism can be altered so that the amount of water striking the runner can be varied. **3. Runner** ➢ It is a circular wheel on which a series of radial curved vanes are fixed. ➢ The surface of the vanes is made very smooth. ➢ The radial curved vanes are so shaped that the water enter and leaves the runner without shock. ➢ The runners are made of cast steel, cast iron or stainless steel. They are keyed to the shaft **4. Draft- tube** ➢ The pressure at the exit of the runner of a reaction turbine is generally less than atmospheric pressure. ➢ The water at exit cannot be directly discharged to the tail race. ➢ A tube or pipe of gradually increasing area is used for discharging water from the exit of the turbine to the tail race. This tube of increasing area is called draft tube. **<u>WORKING:</u>** ➢ Francis Turbines are generally installed with their axis vertical. Water with high head (pressure) enters the turbine through the spiral casing surrounding the guide vanes. ➢ The water looses a part of its pressure in the volute (spiral casing) to maintain its speed. ➢ Then water passes through guide vanes where it is directed to strike the blades on the runner at optimum angles. ➢ As the water flows through the runner its pressure and angular momentum reduces. This reduction imparts reaction on the runner and power is transferred to the turbine shaft. ➢ Water exits the turbine through the draft tube, which acts as a diffuser. 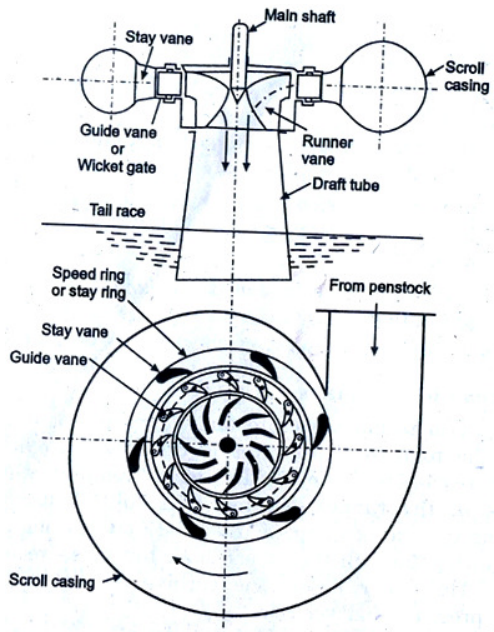 **(ii) Given data:** D=50 mm =0.05m V=40 m/s **To find: F**	8+2

Solution:

$$F = \frac{w \cdot a \cdot V^2}{g} \qquad a = \frac{\pi}{4} \times d^2$$

$$= \frac{\pi}{4} \times 0.05^2$$

$$= \frac{9.81 \times 1.963 \times 10^{-3} \times 40^2}{9.81} \qquad \boxed{a = 1.963 \times 10^{-3}\ m^2}$$

$$\boxed{F = 3.1416\ kN}$$

(OR)

19.(b) **(i) Working of jet pump:** 5+5

JET PUMP

Construction:

- A jet pump consists of a conventional radial flow pump with jet nozzle at the suction end.
- It helps to increase the suction lift beyond the normal limit about 8 metres of water head.
- With use of jet assembly it is possible to increase the suction lift upto 60 m.

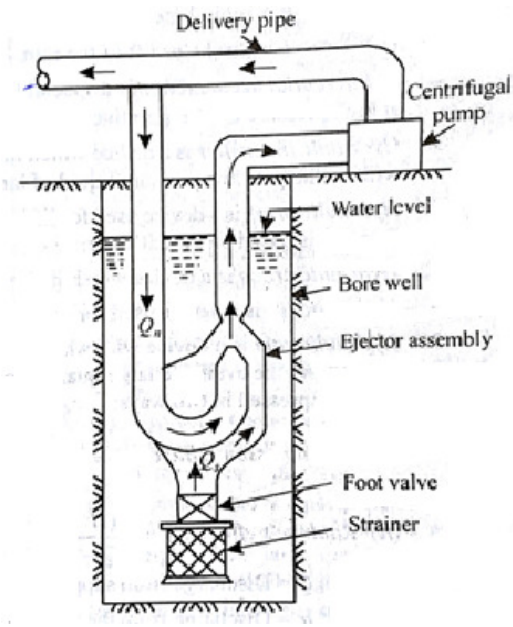

Working:

- The suction side is completely filled with water and the pump is started.
- A stream of high pressure water from the delivery pipe of the pump is allowed to flow through the suction jet nozzle.
- The pressure energy of water is converted into kinetic energy due to which a local drop in the pressure takesplace.
- Due to this pressure drop suction is created and water is sucked from the bore well.
- This action ensures a considerably large supply of low pressure water.
- When the streams with different velocities mix (in the mixing zone), some pressure rise takes place in the mixing zone.
- After mixing zone, there is a diverging section where further rise of pressure occurs due to decrease in velocity.

(ii) Types of impellers in centrifugal pump:

1. Closed or shrouded impeller
2. Semi-open impeller
3. Open impeller

1. Closed impeller

- In a closed impeller, the vanes are supported between two disks or shrouds so

as to form closed between them.

- Closed impellers are generally used in centrifugal pumps.
- It is used to handle clear and thin liquids like water, oil of low viscosity, chemicals, acids etc.
- The materials of impeller should resist the reaction of chemicals to be handled.
- Cast steel impeller is used for pumping hot water.
- Non-ferrous impellers coated with non-corrodible materials are used for chemicals and acids.

2. Semi-open impeller

- When the vanes have only base plate and no crown plate the impeller is called as semi-open impeller.
- The impeller vanes are cast integral with the shroud.
- This type of impeller is used for pumping liquids containing debris to some extent only, such as sewage water, paper pulp, sugar molasses etc.
- These impellers have less number of vanes but more height to avoid clogging.
- The choice of materials is based on the chemicals to be handled.

3. Open impeller

- In an open impeller the vanes have neither the crown plate nor the base plate.
- The vanes are attached to a central web plate. Such pumps are used to handle water along with sand, pebbles, clay etc.
- As these impellers are used for heavy duty it is made of forged steel.
- It is also used to handle high viscous liquid and its life is short due to rough duty.

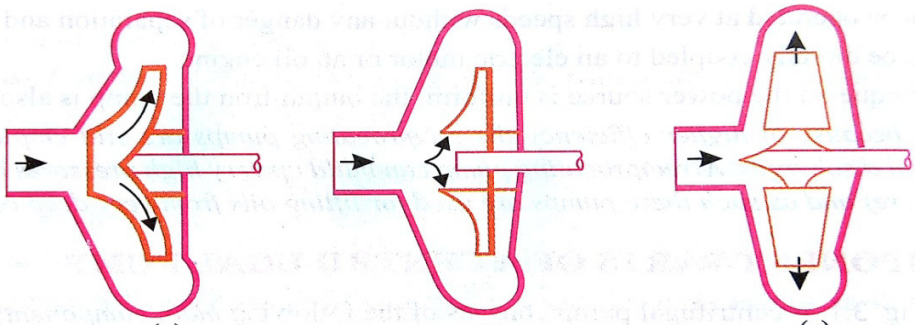

(a) (b) (c)

20.(a) **(i) FRL Unit:** 5+5

The air service unit is a combination of following units.

1. Compressed air filter,
2. Compressed air regulator and
3. Compressed air lubricator.

Air filter, regulator and lubricator are connected together with close nipples as one package. This unit is also known as FLR (Filter, Lubricator, Regulator) package or FRL (Filter, regulator, lubricator) package.

Air service unit supplies a clean, regulated and lubricated air for pneumatic circuits.

First, air filter receives air supply. It removes dust particles and supplies clean air to the regulator. The regulator ensures constant output pressure of the air irrespective of the pressure fluctuations in the main loop. The regulated air passes through

the lubricator. The lubricator treats the dry air with a small charge of oil. From the FLR package (air service unit), pressurised air is distributed to the actuator (a cylinder) through a directional control valve.

Generally, the regulator is fitted between the air filter and lubricator although the order is filter to lubricator to regulator. In any case, the filter should be located before the lubricator. If not, the filter as it removes water vapour, may also strip the air of lubrication.

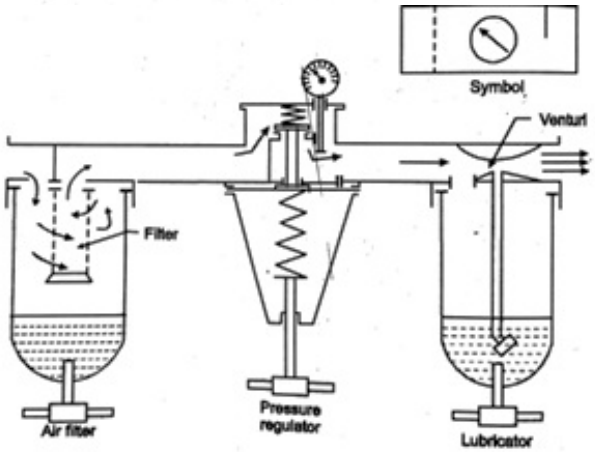

(ii) Needle valve:

- In pneumatic system, flow control valve is used to control the speed of the actuator.
- It can be achieved by varying the area of flow through which air is passing.
- When area is increased, more quantity of air will be sent to actuator which increases the speed.
- Similarly when area is reduced, quantity of air entering into the actuator is reduced which decreases the speed.

Working:

- Assume that the needle valve is in closed position as shown in figure. Then, the compressed air from inlet will freely flow through check valve to outlet.
- At this position, air flow cannot take place from outlet to inlet. If the needle valve is slightly opened, the check valve is closed due to the action of spring provided at its bottom.
- Hence, the compressed air flows through needle valve opening to outlet which is connected to actuator. Thus the piston reciprocates inside a cylinder.

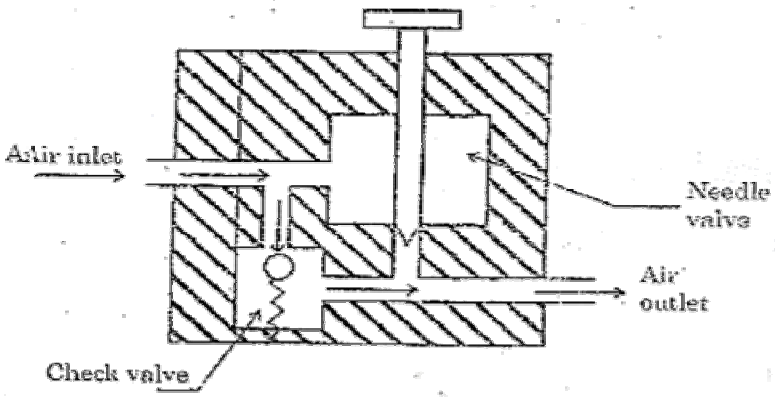

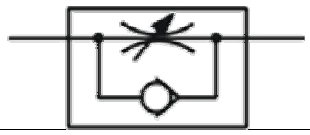

	(OR)	
20.(b).	**(i) Pneumatic circuit with Quick exhaust valve:** A quick exhaust valve is used in pneumatic circuit to increase the speed of exhaust. Thus it increases the speed of piston and speed of cylinders. The circuit for controlling the operation of a single acting cylinder is shown in fig. 4.28. It includes a 3/2 d.c.v. and a quick exhaust valve. 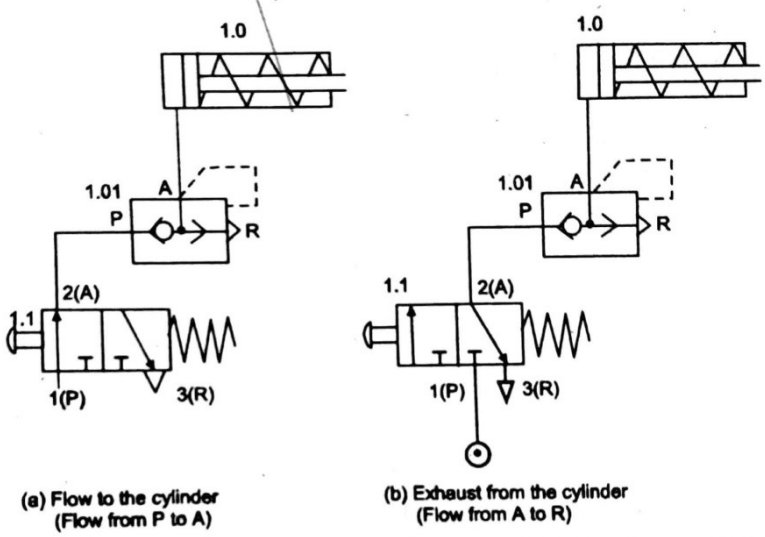 Fig. 4.28 Quick exhaust valve in pneumatic circuit (a) Flow to the cylinder (Flow from P to A) (b) Exhaust from the cylinder (Flow from A to R) *When the spool of d.c.v. is moved to extreme right:* The pressure port of d.c.v. (P) is connected to the working port (A). The compressed air flows from pressure port (P) to the working port (A). The air enters through the supply port (P) of the quick exhaust valve and leaves through the outlet port (A). Then it flows to the left end of the cylinder. The piston is moved from left to right against the spring force. *When the spool of d.c.v. is moved to extreme left:* The piston is moved from right to left by the return spring force. The exhaust air then enters the port (A) of the exhaust valve. The supply port (P) of the quick exhaust valve is closed by the disc. The exhaust air is now expelled to atmosphere through the large orifice (R). Thus, the resistance offered to the exhaust air is reduced and the piston speed is increased. [Fig. 4.28]. **(ii) Double acting cylinder with meter-in circuit** The double acting pneumatic cylinder will do the work both in forward & return stroke of the piston. Both forward and return stroke are controlled by DCV. **Forward Stroke:** It is a working stroke and Air inlet to the cylinder is controlled by flow control valve. Hence the piston will move slowly. **Return Stroke:** It is a idle stroke, the air is not controlled and freely exhaust to atmosphere. In this the speed is high. The speed of the piston can be controlled by quantity of air entering into the cylinder. Hence it is called meter-in circuit. It is done by using a flow control valve integral with a check valve. In this circuit the flow control valve is located in the line between 4/2 DCV and cylinder. **Working**	5+5

The air from 4/2 DCV enters into the cylinder in the left side through flow control valve and moves the piston from left to right and doing the work. At the same time, the air is released from cylinder to exhaust. During the return movement of the piston, the air from 4/2 DCV enters into the right side of the cylinder. Hence the piston moves from right side to left side. At the same time, the air present in the left side of the cylinder released to exhaust through check valve and 4/2 DCV. Hence the speed of the piston is increased.

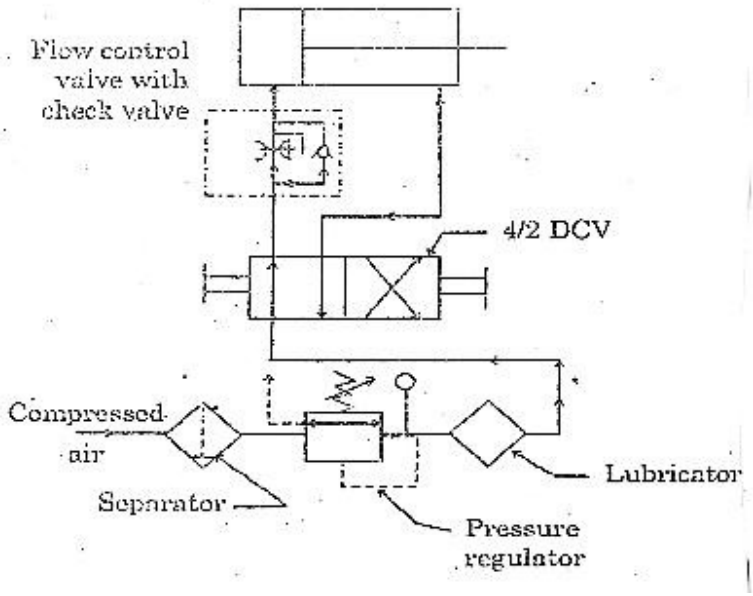

21 (a). **(i) VANE PUMP** 5+5

Construction:

- It consists of casing, rotor disc and vanes.
- The center of the disc is eccentric to the centre of casing.
- Disc has radial slots. Rectangular vanes are provided in the slots.
- These vanes are free to move in the slots.

Working

- When the rotor rotates in the casting, the vanes are moving outward due to centrifugal force which produces air tight contact with the casing.
- Due to the rotation of rotor the space between the chamber and vanes expands at the inlet and partial vacuum is created in it. Therefore the oil is sucked into it.

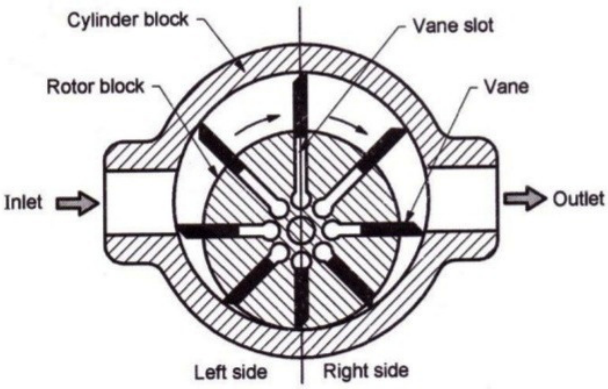

- The oil is trapped between the vanes.
- This oil is carried around the casting and discharged in the delivery spot, as the disc rotates.
- The delivered oil can't return back to the suction chamber, because of fluid tight seal produced by the vanes and casing surface.

(ii) Gas filled bladder type accumulator:

Construction:

- A bladder accumulator is the most commonly used hydro-pneumatic accumulator.
- The bladder is filled with nitrogen and fitted in a welded or forged steel pressure vessel.

- The bladder is made of an elastic material (elastomer), e.g. rubber.
- The gas pre-charge pressure can be adapted via the gas inlet/outlet valve on top of the bladder accumulator.
- If the bladder accumulator is mounted vertically or at an angle, the gas side must always be on top.

Working:

- When the pressure in the system exceeds the pre-set value of gas charge, the poppet opens and the fluid starts entering into the accumulator.
- The incoming pressurized fluid compresses the gas inside the bladder.
- When the gas pressure and fluid pressure equalize, the fluid comes to a static position.
- When the pressure in the external circuit falls below that in the accumulator, the gas expands and forces fluid into the circuit.

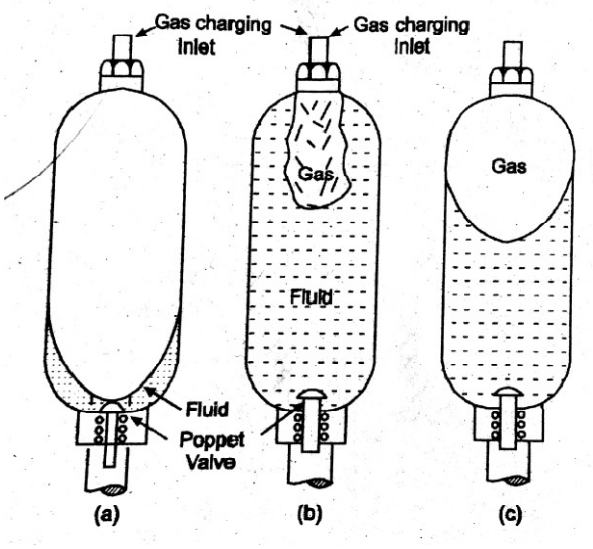

- Specially designed bladder accumulators are capable of operating at maximum pressures of up to 1,000 bar.
- The gas volume and effective hydraulic volume is medium, ranging from 0.5L to 450L
- Since the accumulator has no piston, ram or spring the inertia of the device is extremely small.

(OR)

21. (b) **Hydraulic circuit for milling machine:** 10

In a milling machine the milling cutter rotates in a fixed position. Milling cutter is a multipoint tool. Cutting force will be heavier. Return movement of table takes more time. Forward movement of table takes less time (Rapid return motion). The forward motion of table is performed in two steps.

- Rapid forward motion till the job touches the milling cutter.
- Slow feed motion during cutting. Return movement is idle strike. Therefore quick return motion arrangements are made to reduce the idle time.

It consists of: Hydraulic cylinder, Piston rod with Cam, Flow control valve, 4/3 DCV, Relief valve, Pump, Reservoir.

Forward stroke:

When 4/3 DCV is shifted towards left, the pump supply enters the left side of the cylinder through the port –B which causes the piston move towards right for forward stroke. At the same time, the oil on the right side of the piston flows to the reservoir through the opened deceleration valve. Hence the table advances rapidly till the cam closes the deceleration valve. The remaining forward stroke, the table moves with slow motion for machining. During that time, the oil on right side of the piston goes to reservoir through the restricted valve as it is closed. It will flow only through the restricted passage of flow control valve.

Return stroke

During return stroke DCV is shifted to the right. The pump supply enters the rod side of the piston through port –A. At the same time, the oil on the left side of the piston directly goes to the reservoir. The quantity of oil required for the same piston travel will be less due to presence of piston rod. Thus the quick return motion is obtained

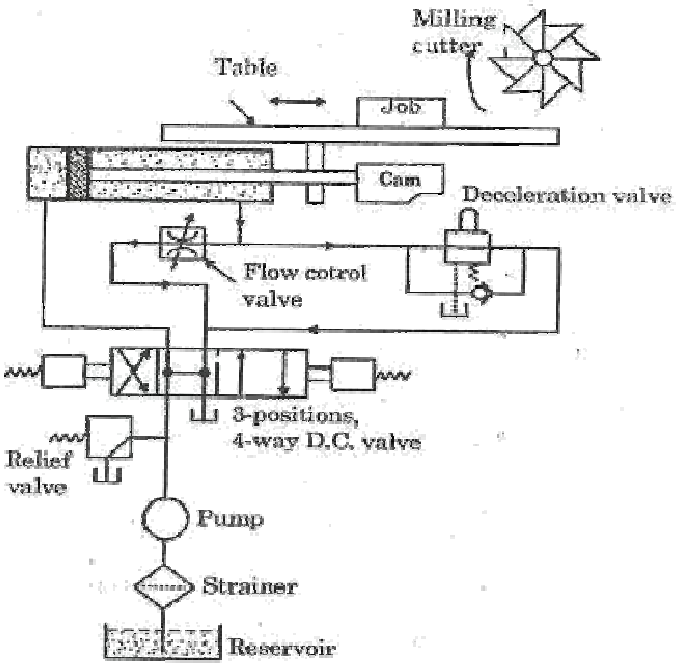

Prepared by:
M.SARAVANAKUMAR
Lecturer
Department of Mechanical Engineering
PSG POLYTECHNIC COLLEGE, COIMBATORE – 641 004

573 Register No.:

October 2018

Time – Three hours
(Maximum Marks: 75)

[N.B: (1) Q.No. 8 in PART – A and Q.No. 16 in PART – B are compulsory. Answer any FOUR questions from the remaining in each PART – A and PART – B

(2) Answer division (a) or division (b) of each question in PART – C.

(3) Each question carries 2 marks in PART – A, 3 marks in Part – B and 10 marks in PART – C.]

PART – A

1. Define vacuum pressure.
2. What is piezometer?
3. What is continuity equation?
4. What is the value of datum head when the pipe is in horizontal position?
5. What is slip and negative slip?
6. Draw the ISO symbol of quick exhaust valve.
7. What is meant by 3/2 DCV?
8. What are the basic elements of hydraulic systems?

PART – B

9. A gauge records a pressure of $20 kN/m^2$. Calculate the corresponding absolute pressure in kN/m^2 and metre of water.
10. Compare laminar flow and turbulent flow.
11. List out the minor losses occurred in the pipe line flow.
12. What is an indicator diagram?
13. Derive an expression for the force exerted and work done by the jet on a series of moving blades.
14. Define flash point and fire point of liquid.

15. Explain the working of 4/2 DCV used in hydraulic systems.

16. Describe the working of shuttle valve.

PART – C

17. (a) (i) Write short notes on hydraulic jack.

(ii) An U tube monometer containing mercury has its right limb open to atmosphere. The left limb is connected to a pipe containing water under pressure, the centre of which is in level with the free surface of mercury. The difference in levels of mercury is 50mm. Calculate the pressure of water in the pipe in (i) kN/m^2 and (ii) 'm' of water.

(Or)

(b) A differential manometer connected to two pipes reads 0.25m of mercury. Water flows through one pipe and oil through the other. Find the pressure difference between two pipes, if the level of pipes is same. The pressure of water is greater then the pressure of oil and the height of water column from the centre of the pipe is 0.45m. Take relative density of oil is 0.8.

18. (a) (i) What are the hydraulic co-efficient? Explain.

(ii) The ratio between length and diameter of the pipe is 500. Determine the head lost due to friction, if the velocity of water is 4m/s. Take Chezy's constant as 96.

(Or)

(b) A hydraulic machine is supplied with 300 lps of water through a horizontal pipe of 250 m long and 300 mm diameter. Find the power supplied to the machine, if the pressure at the entrance is 0.5 N/mm^2. Take f=0.01.

19. (a) (i) Explain the construction and working of Kaplan turbine with neat sketch.

(ii) Differentiate impulse and reaction turbines.

(Or)

(b) Describe multi stage pump with (i)Impellers in parallel and (ii)Impellers in series.

20. (a) What is pneumatic system? Explain the main elements of the system with a sketch.

(Or)

(b) Draw and explain the circuit diagram for the operation of a double acting cylinder with metering-out-control.

21. (a) (i) What is hydraulic motor? Explain.

(ii) Explain the working of radial piston pump with neat sketch.

(Or)

(b) (i) Describe viscosity and lubricity of fluids.

(ii) Draw the hydraulic circuit with ISO symbols for the table movement of a surface grinder.

---

921 Register No.:

April 2019

Time – Three hours
(Maximum Marks: 75)

[N.B: (1) Q.No. 8 in PART – A and Q.No. 16 in PART – B are compulsory. Answer any FOUR questions from the remaining in each PART – A and PART – B

(2) Answer division (a) or division (b) of each question in PART – C.

(3) Each question carries 2 marks in PART – A, 3 marks in Part – B and 10 marks in PART – C.]

PART – A

1. Define specific weight of a fluid.
2. Define Pascal's law.
3. Define uniform flow of fluid.
4. Write any two differences of Francis and Kaplan turbines.
5. Differentiate plunger and piston pumps.
6. List out the important elements of pneumatic systems.
7. Define de-emulsibility.
8. Define hydraulic gradient line.

PART – B

9. Differentiate gauge pressure, vacuum pressure and absolute pressure.
10. Write short notes on hydraulic press.
11. State any three assumptions made in Bernoulli's theorem.
12. Derive an expression for the force exerted and work done by the jet on a series of moving plates.
13. Write short notes on FRL unit.
14. Compare hydraulic system with pneumatic system.
15. Explain the working of any one type of accumulator.
16. Differentiate metering-in and metering-out circuits.

PART – C

17. (a) Explain with a sketch, the working principle of a Bourdon's tube pressure gauge. Mention its applications.

(Or)

(b) (i) Explain the pressure measurement by inclined tube micro manometer.

(ii) The vacuum pressure in a pipe line carrying water was measured by U-tube manometer. The difference of mercury between the limbs is 0.05m and the free surface of mercury in the open limb is 0.1m below the centre line of the pipe. Find the absolute pressure head in the pipe in terms of metre of water.

18. (a) A pipe line is carrying water at a point A the diameter is 600mm, the pressure is 70 kN/m^2 and the velocity is 2.4 m/sec. At another point B which is 2m higher then A in the same pipe, the diameter is 300mm and the pressure is 14 kN/m^2. Determine the direction of flow.

(Or)

(b) (i) Derive the Chezy's formula for the loss of head due to friction in pipes

(ii) A pipe of 1m diameter and 1km long delivers water to a town at the rate of 10 m^3/sec. Calculate the loss of head due to friction if f=0.04.

19. (a) With a neat sketch, explain the working of Pelton wheel.

(Or)

(b) Explain the construction and working of submersible pump with neat sketch.

20. (a) Draw a pneumatic circuit for the direct control of single acting cylinder and explain.

(Or)

(b) Draw the pneumatic circuit for the automatic operation of double acting cylinder and explain.

21. (a) (i) Explain spring loaded accumulator with sketch.

(ii) Explain the working of pressure intensifier with a neat sketch.

(Or)

(b) (i) Explain the operation of internal gear pump with neat sketch.

(ii) Explain the hydraulic circuit with ISO symbols for the quick return motion of a shaper.
